DS-2CFSP8-D/4G
4+4 MP 24/7 Solar 4G Dual-lens PT Camera





It can be used in areas with inconvenient power supply and grid connection or remote areas, and is applied in scenarios with high equipment maintenance costs and strict requirements for equipment stability, such as power transmission lines, water conservancy river systems along rivers, petroleum and petrochemical oil pipelines, forest key areas, etc.

- Support AOV Mode: 24/7 video recording
- 8 W solar panel and 9000 mAh battery
- Support 4G LTE data transmission
- Smart Hybrid Light: 30 m white light and IR
- Built-in microphone and speaker, support two-way audio
- Smart Tracking: PT Camera achieves person tracking with Motion Detection 2.0
- Panoramic Details: Wide-angle lens for background information, specific lens for close-up details
- Motion Detection 2.0: Support person and vehicle detection

▪ Specification

Camera	
Image Sensor	1/3" Progressive Scan CMOS
Max. Resolution	2560 × 1440
Min. Illumination	Color: 0.005 Lux @ (F1.6, AGC ON)
Shutter Time	1 s to 1/100,000 s
Day & Night	IR cut filter
Angle Adjustment	Pan: -170° to 170°,tilt: 0° to 80°
Lens	
Lens Type	Fixed focal lens Bullet channel: 2.8 mm PT channel: 4 mm
Focal Length & FOV	2.8 mm, horizontal FOV 98.2°, vertical FOV 54.2°, diagonal FOV 114.6° 4 mm, horizontal FOV 78.8°, vertical FOV 42.3°, diagonal FOV 93.4°
Aperture	F1.6
Lens Mount	M12
Iris Type	Fixed
Pixel Density	
DORI	Bullet channel: 2.8 mm D: 61 m, O: 24 m, R: 12 m, I: 6 m PT channel: 4 mm D: 82 m, O: 32 m, R: 16 m, I: 8 m
Illuminator	
Supplement Light Type	IR,White Light
Supplement Light Range	Up to 30 m
IR Wavelength	850 nm
Smart Supplement Light	Yes
Video	
Main Stream	Bullet channel 1: 50 Hz: 12.5 fps (2560 × 1440, 1920 × 1080, 1280 × 720) 60 Hz: 15 fps (2560 × 1440, 1920 × 1080, 1280 × 720) PT channel 2: 50 Hz: 12.5 fps (2560 × 1440, 1920 × 1080, 1280 × 720) 60 Hz: 15 fps (2560 × 1440, 1920 × 1080, 1280 × 720)
Sub Stream	Bullet channel 1: 50 Hz: 12.5 fps (768 × 432) 60 Hz: 15 fps (768 × 432) PT channel 2: 50 Hz: 12.5 fps (768 × 432) 60 Hz: 15 fps (768 × 432)
Video Compression	Main stream: H.265, Sub-stream: H.265
Video Bit Rate	32 Kbps to 8 Mbps
H.265 Type	Main Profile
Bit Rate Control	CBR,VBR
Audio	
Audio Compression	G.711ulaw
Audio Bit Rate	64 Kbps(G.711ulaw)

Audio Sampling Rate	8 kHz
Environment Noise Filtering	Yes
Network	
Simultaneous Live View	Up to 6 channels
API	SDK
User/Host	Up to 32 users 3 user levels: administrator, operator, and user
Client	Hik-Connect
Mobile Communication	
Standard	LTE-FDD
Frequency	EU:LTE-FDD: B1/3/5/7/8/20/28 LA:LTE-FDD: B2/3/4/5/7/8/28/66
Uplink and Downlink Data Rate	Cat 1, uplink: 5.1 Mbps, downlink: 10.3 Mbps
SIM Card Type	Nano SIM
Image	
Image Settings	brightness,contrast,white balance,saturation,sharpness
Day/Night Switch	Day,Night,Auto,Schedule
Image Enhancement	BLC,HLC,3D DNR
Wide Dynamic Range (WDR)	Digital WDR
Interface	
On-Board Storage	Built-in memory card slot, support microSD/microSDHC/microSDXC card, up to 512 GB
Reset Key	Yes
Built-in Microphone	Yes,1 built-in microphone
Built-in Speaker	Yes, 1 built-in speaker
Event	
Basic Event	Motion detection (support alarm triggering by specified target types (human and vehicle))
Linkage	Notify surveillance center,trigger recording,trigger capture,audible warning,upload to memory card
General	
Material	Plastic
Dimension	Ø110.9 mm × 145.4 mm (Ø4.37" × 5.72")
Package Dimension	322 mm × 197 mm × 210 mm (12.68" × 7.76" × 8.27")
Weight	Approx. 1560 g (3.44 lb.)
With Package Weight	Approx. 2180 g (4.81 lb.)
Startup and Operating Conditions	-20 °C to 50 °C (-4 °F to 122 °F). Humidity 95% or less (non-condensing)
Storage Conditions	-20 °C to 50 °C (-4 °F to 122 °F). Humidity 70% or less (non-condensing)
General Function	Mirror,flash log
Flashing Light	NA
Battery	
Battery Type	Lithium
Capacity	9000 mAh
Max. Charging Voltage	8.4 V
Battery Voltage	6 V to 8.4 V

Operating Temperature	Charging: 0 °C to 45 °C (32 °F to 113 °F) Discharging: -20 °C to 50 °C (-4 °F to 122 °F)
Cycle Lifetime	Cap(800th) ≥ 80%
Battery Weight	Approx. 170 g (0.37 lb.)
Approval	
RF	EN IEC 62311:2020, ETSI EN 301 489-17 V3.3.1, ETSI EN 301 908-1 V15.2.1, ETSI EN 301 489-1 V2.2.3, ETSI EN 301 908-13 V13.2.1
EMC	CE-EMC: EN 55032:2015+A1:2020, EN 50130-4:2011+A1:2014, EN IEC 61000-3-2:2019+A1:2021, EN 61000-3-3:2013+A1:2019+A2:2021, EN 50121-4: 2016+A1:2019
Safety	CB: IEC 62368-1: 2014+A11, CE-LVD: EN 62368-1: 2014/A11: 2017
Environment	CE-RoHS: 2011/65/EU, WEEE: 2012/19/EU, Reach: Regulation (EC) No 1907/2006
Solar Power	
Solar Panel Type	Monocrystalline silicon solar panel
Power Consumption	8 W
Solar Panel Dimensions & Weight	Dimensions: 263.8 mm × 171.7 mm × 18.5 mm (10.39" × 6.76" × 0.73") Weight: 450 g (0.99 lb.)
Working Temperature	-20 °C to 60 °C (-4 °F to 140 °F)
Protection	IP65

▪ Dimension

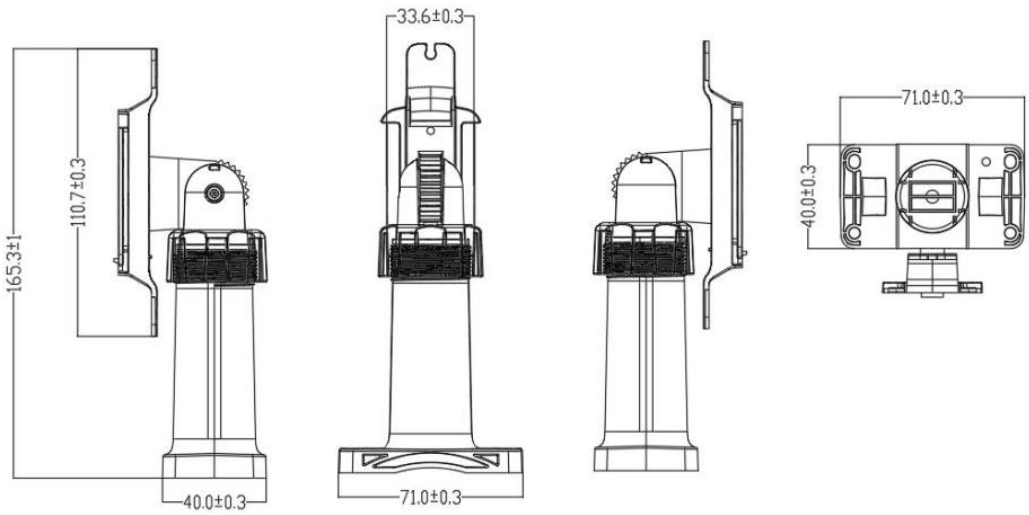

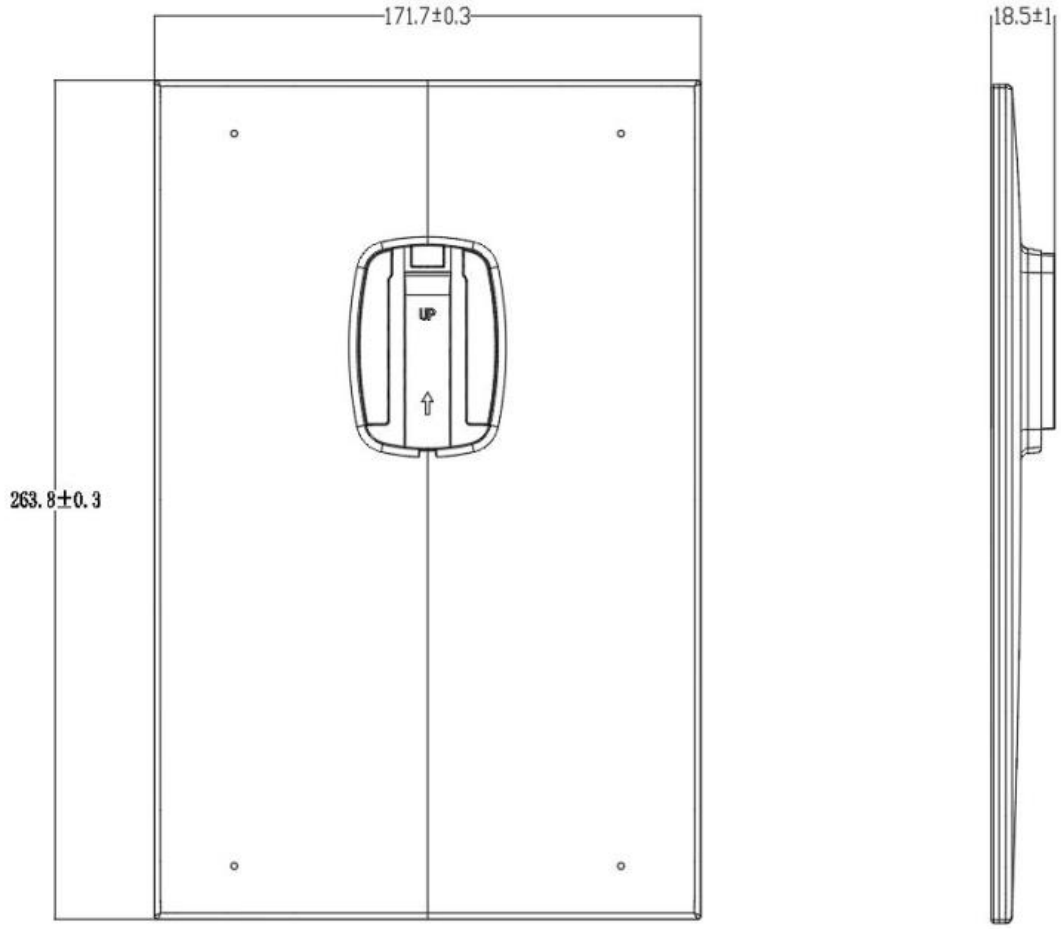
171.7±0.3
263.8±0.3
UP
18.5±1

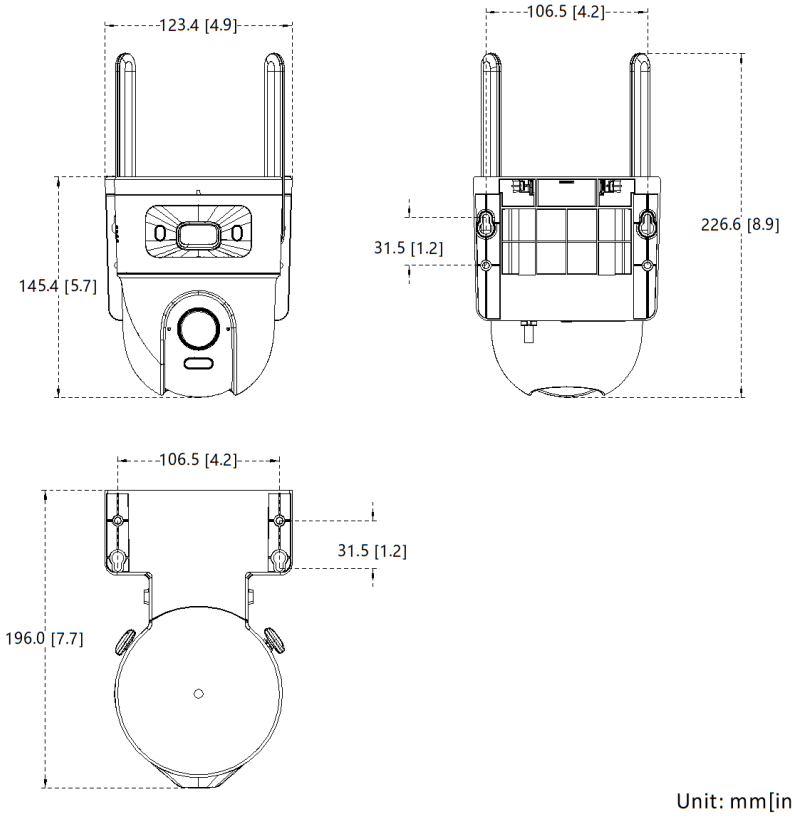

Unit: mm[inch]

See Far, Go Further

www.hikvision.com
support@hikvision.com

© Hangzhou Hikvision Digital Technology Co., Ltd. Unless otherwise agreed, Hikvision makes no warranties, express or implied. We reserve the right to introduce modifications without notice.

HIKVISION®