Freezer 36 A-RGB

Multi Compatible Tower CPU Cooler with A-RGB











General Specifications

Compatibility	Intel® LGA1851 | LGA1700 AMD® AM5 | AM4
PI | NNPI	245 | 219
TIM	MX-7 (0.8 g)
Warranty	6 Years
Operating Ambient Temperature	0–40 °C
Dimensions	104 (L) x 126 (W) x 159 (H) mm
Weight	917 g

Heatsink Specifications

Heatpipes	4x 6 mm Ø, Copper
Finnstack	59x 0.4 mm, Aluminium

Fan Specifications

General	2x P12 PWM PST A-RGB
Speed	200–2000 rpm, PWM Controlled (0 rpm below 5 % PWM)
Bearing	Fluid Dynamic Bearing
Current | Voltage	0.11 A | 12 V DC
Cable Length	200 mm + 80 mm Splitter Cable
Connector	4-Pin PWM-Connector + 4-Pin Plug

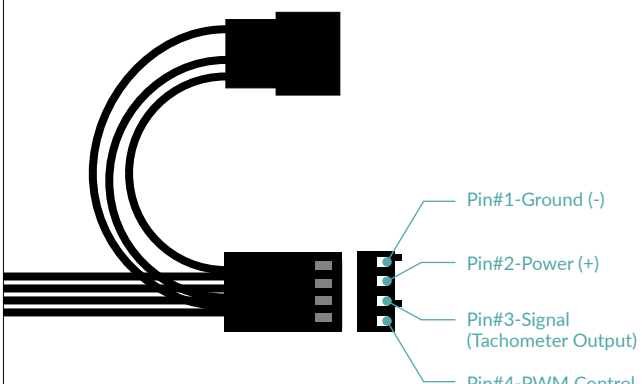

RGB Specifications

LEDs	12x A-RGB LEDs
Current | Voltage	0.40 A | 5 V DC
Cable Lenght	200 mm + 80 mm Splitter Cable
Connector	3-Pin A-RGB-Connector + 3-Pin Plug

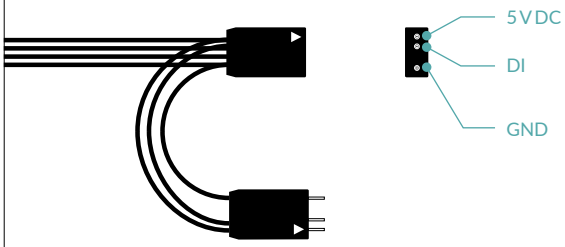

Shipping Information – Freezer 36 A-RGB (Black)

Box Dimension	190 (L) x 186 (W) x 117 (H) mm
Gross Weight	1258 g
SKU	ACFRE00124A
EAN	4895213704151
UPC	840033401968

Shipping Information – Freezer 36 A-RGB (White)

Box Dimension	190 (L) x 186 (W) x 117 (H) mm
Gross Weight	1258 g
SKU	ACFRE00125A
EAN	4895213704168
UPC	840033401975

Freezer 36 A-RGB

Multi Compatible Tower CPU Cooler with A-RGB

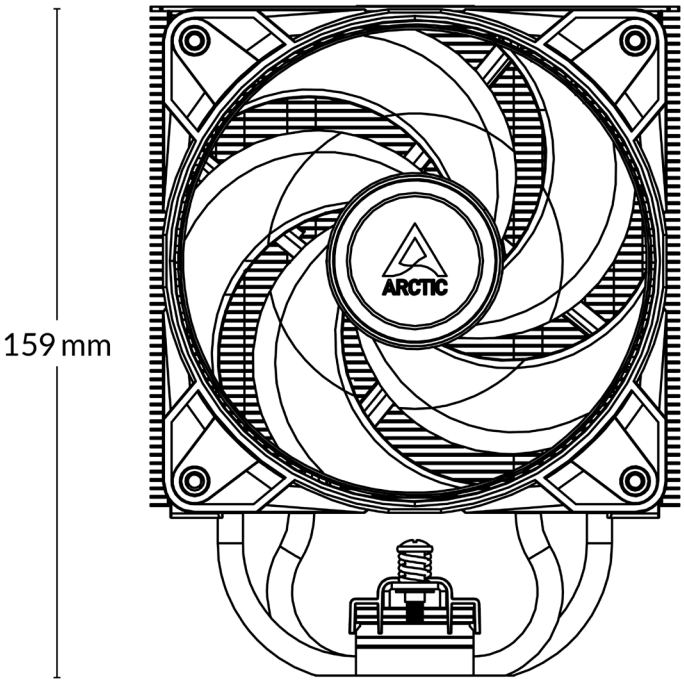

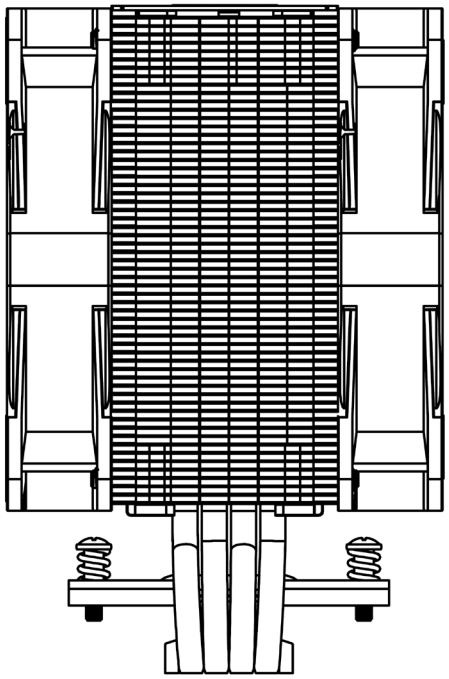

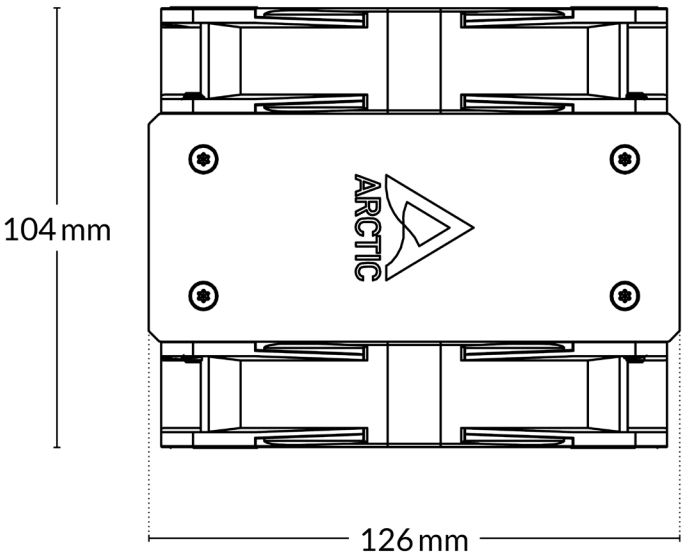

All materials are compatible with RoHS requirements.

MORE INFORMATION

ARCTIC
arctic.de

MANUALS